Unit – I: Introduction to C ++ Programming

Objectives

- Character set
- C++ Tokens
- Keywords
- Identifiers
- Constants
- Variables
- Data types
- Declaration of variables

Introduction

- C++ is High level programming language
- C++ language is used by programmers to interact with computer
- Steps to learn a programming language

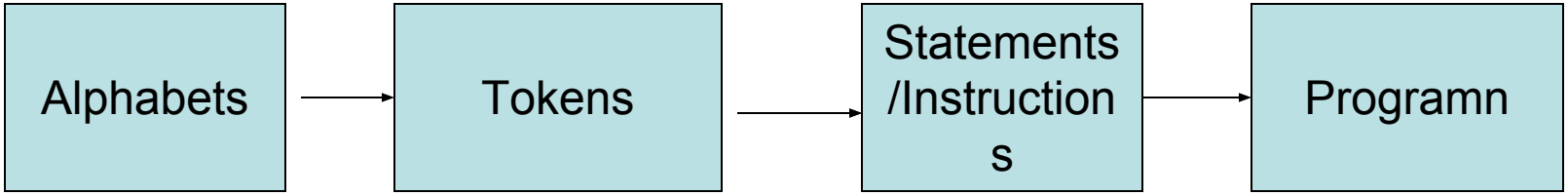

Character set(Alphabets of C++)

- Any symbol that is used while writing a C++ program is called character or an alphabet
- A Character can be a letter,digit or any special symbol all those charecters that can be used while writing C++ programs are called Character set.

Examples of Character set

- Letters like A to Z and a to z
- Digits like from 0 to 9
- Symbols such as # , ( ) { } [ ] % . ? “
- White spaces like \t ,\n

C++ Tokens

- A token is basic unit of any program
- One or more characters are grouped in sequence to form meaningful words.
- These meaningful words are called tokens

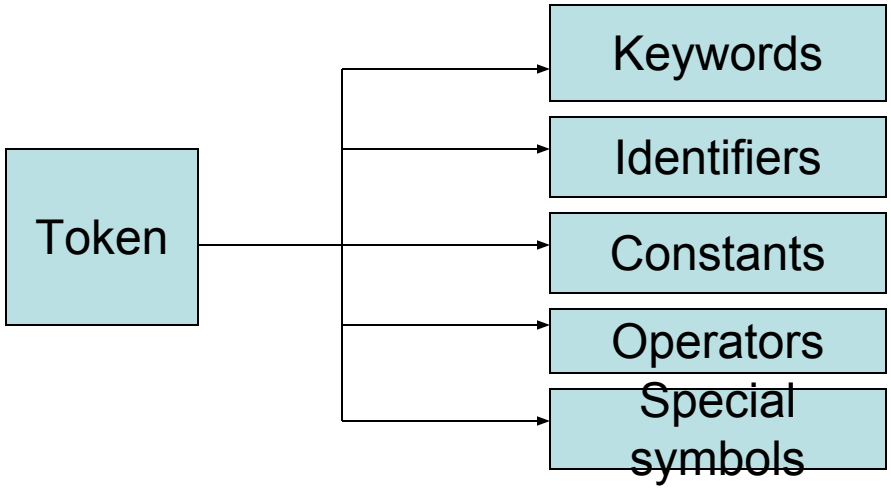

Keywords

- Certain words known as reserved for specific meaning in C++ language.
- Keywords should be writen in lower case letters.

Keywords

auto	default	float	register	struct	volatile
break	do	for	return	switch	while
case	double	goto	short	typedef	char
else	if	signed	union	const	enum
int	sizeof	unsigned	continue	extern	long
static	void				

Identifiers

- Identifiers refer to the names of variables, functions and arrays.
- These are user defined names and consist of a sequence of letters and digits, with a letter as a first character.
- The underscore character is also permitted in identifiers.

Identifiers

- **Rules of Identifiers:**

- **First character must be an alphabet(or underscore).**
- **Must consist of only letters, digits or underscore.**
- **Only first 31 characters are significant.**
- **Cannot use a keyword**
- **Must not contain white space.**

Constants

- Quantity which doesn’t change its value during the process of execution.
- C supports several types of constants.

Constants

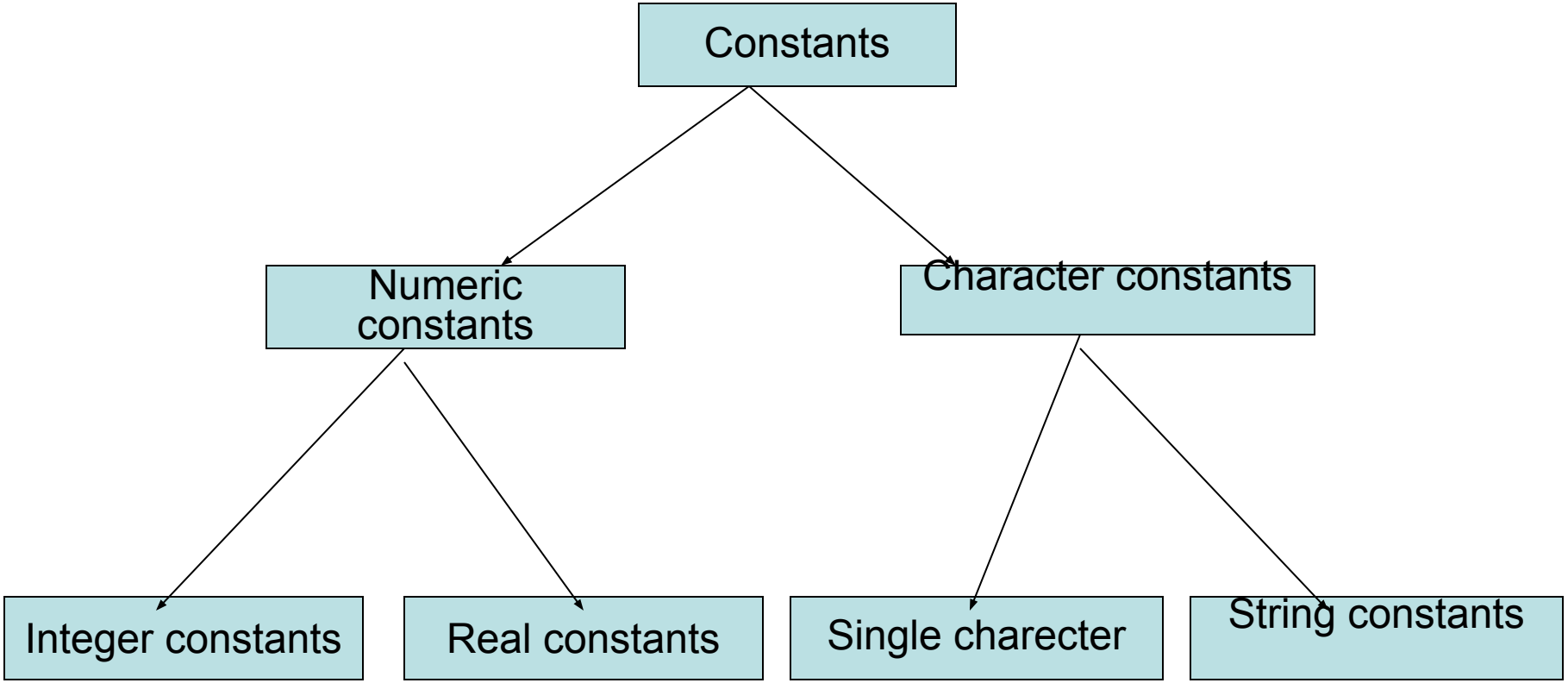
Constants
Numeric constants
Character constants
Integer constants
Real constants
Single charecter
String constants

Rules of constructing integer constant

- Must have at least one digit
- Must not a decimal point
- It can be either positive r negative
- Default is positive
- No commas r blanks allowed within a constant
- 16 bit computer can handle integer numbers in the range of -32768 to 32767

Types of Integer constant

- Decimal – 10,140 ,-140
- Octal -- 010 ,0140,-0140
- Hexadecimal – 0x8A,0xAB

Definitions

- bit A single binary digit, that can have either value 0 or 1
- byte --8 bits.
- halfword --16 bits
- Word-- 32 bits
- Doubleword-- 64 bits

Floating point constants (real constants)

- Floating point constants also known as real constants
- whole number part and fraction part is separated by decimal point
- Two types of representation:
- 1. Fractional form representation.
- 2. Exponential form representation

Rules for constructing floating point constants (fractional form)

- Must have at least one digit
- It requires 4 bytes of memory
- Must have decimal point
- Can be either positive r negative
- Default sign is positive
- No commas r blanks allowed
- Examples +325.64 ,426.0,-32.76

Rules for constructing floating point constants (exponential form)

- Mantissa part and exponential part is separated by letter E.
- Mantissa can be either positive r negative
- Default sign of mantissa is positive
- Exponent must have at least one digit ,must be + or -, default is +
- No commas r blanks allowed
- Examples –4.1e8 ,
- 0.2e-5

Character constant

- It can have any valid single character from the character set enclosed between single quote.
- Each character is have a unique ascii value
- Ex ‘a’ , ‘=‘, ‘8’
- American Standard Code for Information Interchange (ASCII)
- Character constant requires 1 byte of memory for storage
- When character constant is stored in memory the corresponding ASCII value resides in the memory

Backslash character

- Format \(single character)
- It escapes the regular meaning of the character and gives some special meaning
- Ex: \n—new line character
- \’ –’
- This is otherwise called escape sequences

String constant

- Sequence of one r more characters enclosed between double quotes
- String always ends with ‘\0’
- “global”
- “\n”

Variables

- A variable is data name that may be used to store a data value.
- Variable name may consist of letters, digits and the underscore(_) character,
- Examples of valid variable names are: john , Value , T_raise. Etc..
- Invalid Examples are 123, 25th, (area) etc..

Variables

- **Rules:**

- **They must begin with a letter, some systems permit underscore as the first character.**
- **ANSI standard recognizes a length of 31 characters. However, length should not be normally more than eight characters, since only the first eight characters are treated as significant by many compilers.**
- **It should not be a keyword.**
- **White space is not allowed**

Data types

- Storage representations of various data
- ANSI standard -Three classes of data types

1. Primary data types
2. User-defined data types
3. Derived data types

Primitive data type

- 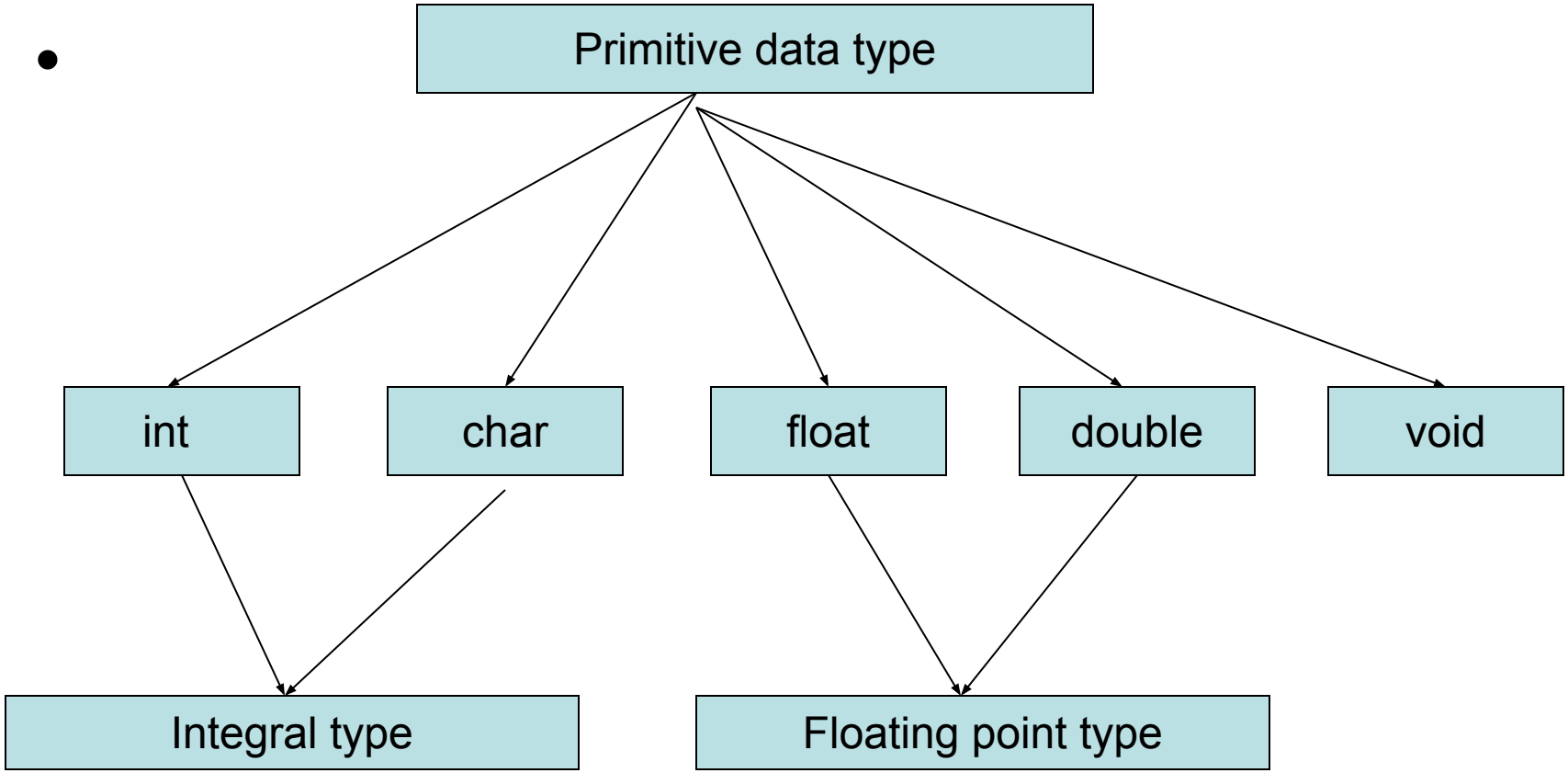

Integer Type

- **Storage size one word(16bit /32bit)**
- **Range –(-2^{15} to 2^{15} -1).**

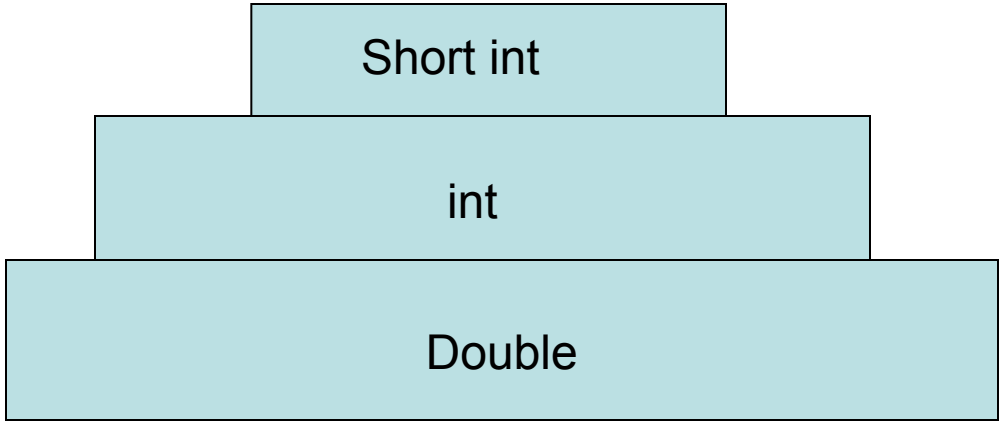

Floating point types

- **Float-Size 32 bits**
- **6 digits precision**
- **Double –size 64 bits**
- **14 bit precision**

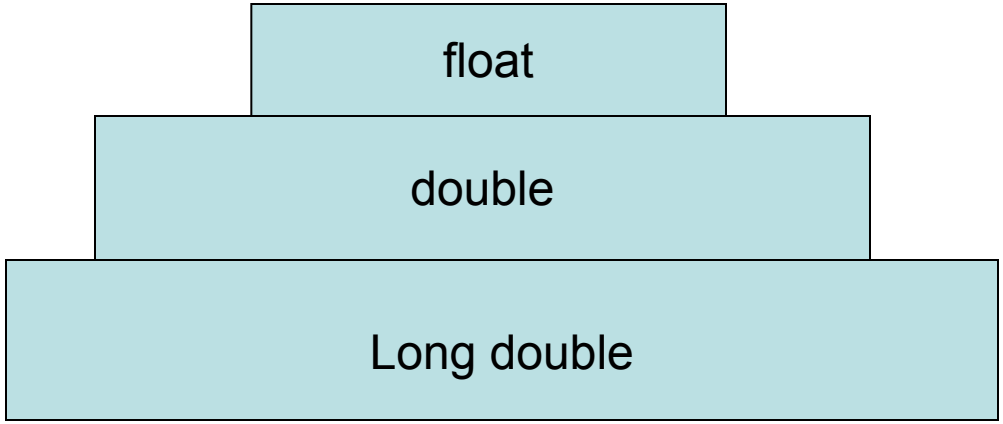

Character Types

- char –size 8 bits
- The qualifier signed or unsigned may be explicitly applied to char.
- While unsigned chars have values between 0 and 255.
- For signed chars Ranges from – (-2^7 to $2^7 - 1$).

Void types

- It has no values.
- This is usually used to specify the type of functions.
- It can also play the role of generic type, meaning that it can represent any of the other standard types

Declaration of variables

- It tells the compiler what the variable name is
- It specifies what type of data that variable can hold
- It allocates space according to data type
- It accepts the data of that format.
- The declaration of variables must be don’t before they are used in the program

Syntax of declaration

- **Syntax.**

  Data-type v1, v2,..vn;

-> V1, v2….,vn are the names of variables.

->Variables are seperated by commas.

-> statement must end with semicolon.

- **Example**

  int a , b, c;

  float a , b, c;

Assigning values to variables

- Variable_name = constant;
- Permits multiple assignment in one line
- Var1=cons1;
- var2=cons2;
- Var1=var2=const;
- Permits assignment at the time of declaration
- Data-type var =const; (initialization)

Defining Symbolic constants

- Unique constants in a program.
- Constants may appear repeatedly in a number of places in the program.
- Two disadvantages in the subsequent use of such problems:

1. Problem in modification of the program.
2. Problem in understanding the program.

Syntax:

#define symbolic-name value of constant.

Some valid ex.: #define PI 3.14159

Declaring a variable as constant

- We can achieve this is declaring the variable with the qualifier const at the time of initialization.
- Ex: const int class_size = 40;
- Const is a new data type qualifier.

Declaring a variable as Volatile

- The value may be changed at any time by some external sources.
- Ex: volatile int date;
- The value of date may be altered by some external factors.
- If we wish that the value must not be modified by the program while it may be altered by some other process, then we have to declare as both const and volatile
- Volatile const int location = 100

Outcomes

Students will be able to :

Define Character set, C++ Tokens, Keywords, Identifiers, Constants, Variables, Data types, Explain the Declaration of variables

ASSIGNMENT

1. What is a constant '? Explain the different types of C++ constants.
2. Explain integer constants and floating-point constants.
3. What is variable ? When do you need a variable?
4. List the rules for forming variable names.
5. How do you declare a variable in C++ ?
6. Why do you declare variables'?
7. Differentiate between the constants and the variables?

Introduction to C++ Program

- Input/output streams “iostream” **provides basic input and output services for C++ programs**.
- iostream uses the objects cin , cout , cerr , and clog for sending data to and from the standard streams input, output, error.
- iostream: iostream stands for **standard input-output stream**.

Introduction to C++ Program

- iostream stands for standard input-output stream.
- #include iostream **declares objects that control reading from and writing to the standard streams**.
- In other words, the iostream library is an object-oriented library that provides input and output functionality using streams.
- A stream is a sequence of bytes.

Introduction to C++ Program

- Namespaces are **used to organize code into logical groups and to prevent name collisions that can occur especially when your code base includes multiple libraries**.
- All identifiers at namespace scope are visible to one another without qualification.

NAMESPACE

“Using Namespace STD;”

- The std namespace in C++ contains many standard library components, including data types, functions and objects.
- When you write “using namespace std;” , you're essentially **telling the compiler to consider all the names in the std namespace as if they're in the global namespace**.

Reading & Writing Statements

- **cout** is **an object of the ostream class that is used to display output to the standard output device, usually the monitor**.
- It is associated with the standard C output stream stdout. **The insertion operator (<<)** is used with cout to insert data into the output stream.

- **cin** object in C++ is **an instance of the istream class, which is part of the standard library**.
- It receives input from the standard input device, typically the keyboard.
- **The insertion operator (>>)** is used with cout to insert data into the output stream.

A Sample C++ Program

Let's start with the short sample C++ program shown here.

```
#include <iostream>
using namespace std;

int main()
{
  int i;

  cout << "This is output.\n";  // this is a single line comment
  /* you can still use C style comments */

  // input a number using >>
  cout << "Enter a number: ";
  cin >> i;

  // now, output a number using <<
  cout << i << " squared is " << i*i << "\n";

  return 0;
}
```

Simple C++ Program

```cpp
// Your First C++ Program

#include <iostream>

int main() {
    std::cout << "Hello World!";
    return 0;
}
```

Output

```
Hello World!
```

Example: Program to Add Two Integers

```
#include <iostream>
using namespace std;

int main() {

  int first_number, second_number, sum;

  cout << "Enter two integers: ";
  cin >> first_number >> second_number;

  // sum of two numbers in stored in variable sumOfTwoNumbers
  sum = first_number + second_number;

  // prints sum
  cout << first_number << " + " <<  second_number << " = " << sum;

  return 0;
}
```

Output

```
Enter two integers: 4
5
4 + 5 = 9
```

C++Program to find the area of circle

```
#include <iostream>
using namespace std;
int main()
{
        float r, area;

        cout << "\n Enter Radius:";
        cin >> r;
        area = 3.14 * r * r;
        cout << "\n The Area of the circle is" << area;
}
```

Output:

Enter Radius: 6.5

The Area of the circle is 132.665

Example: Find the Factorial of a Given Number

```
#include <iostream>
using namespace std;

int main() {
    int n;
    long factorial = 1.0;

    cout << "Enter a positive integer: ";
    cin >> n;

    if (n < 0)
        cout << "Error! Factorial of a negative number doesn't exist.";
    else {
        for(int i = 1; i <= n; ++i) {
            factorial *= i;
        }
        cout << "Factorial of " << n << " = " << factorial;
    }

    return 0;
}
```

Output

```
Enter a positive integer: 4
Factorial of 4 = 24
```

C++ LAB SYLLABUS PROGRAM

Laboratory Component Implement the following programs using cc/gcc compiler	
1	Implement the following requirement: An electricity board charges the following rates to domestic users to discourage large conceptions of energy. 0 - 100 units : Rs 1.50 per unit 101 - 200 units : Rs 1.80 per unit Beyond 200 units: Rs 2.50 per unit All users are charged a minimum of Rs 50. If the total amount is more than Rs 300 then an additional surcharge of 15% is added. The C++ program must read the names of users, number of units consumed and display the calculated charges.